HAMPO-DMT-AR0234 V1.0 IR940S

2.3MP OnSemi AR0234 Global Shutter MIPI Interface 940nm IR Pass Auto Focus Camera Module

Front View

Back View

Specifications

Camera Module No.	**HAMPO-DMT-AR0234 V1.0 IR940S**
Resolution	2.3MP
Image Sensor	AR0234 Global Shutter
Sensor Type	1/2.6"
Pixel Size	3.0 um x 3.0 um
EFL	6.03 mm
F.NO	2.10
Pixel	1920 x 1200
View Angle	68.0°(DFOV) 57.0°(HFOV) 35.0°(VFOV)
Lens Dimensions	18.00 x 18.00 x 23.99 mm
Module Size	60.00 x 26.00 mm
Module Type	Auto Focus
Interface	MIPI
Auto Focus VCM Driver IC	DW9714P
Lens Model	HAMPO-LENS-TRC-20522A18-01
Lens Type	940nm IR Pass
Operating Temperature	-30°C to +70°C
Mating Connector	FH12-24S-0.5SH

Dongguan Hampo Electronic Technology Co., Ltd.
Address No. 58, New Arising Industrial Zone, Tangxia Town, Dongguan, Guangdong, China

Web www.HampoTech.com
E-mail Fairy@hampotech.com
Ella@hampotech.com

Tel (+86) 769 8798 9852
Fax (+86) 879 8798 9853
Mobile (+86) 158 1867 7270

Skype FairyTan
WeChat (+86) 15818677270
WhatsApp (+86) 15818677270

HAMPO-DMT-AR0234 V1.0 IR940S

2.3MP OnSemi AR0234 Global Shutter MIPI Interface 940nm IR Pass Auto Focus Camera Module

Top View

Side View

Bottom View

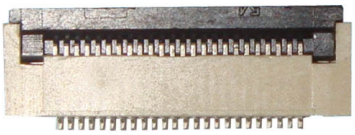

Mating Connector

Dongguan Hampo Electronic Technology Co., Ltd.
Address No. 58, New Arising Industrial Zone, Tangxia Town, Dongguan, Guangdong, China

Web www.HampoTech.com
E-mail
Fairy@hampotech.com
Ella@hampotech.com

Tel (+86) 769 8798 9852
Fax (+86) 879 8798 9853
Mobile (+86) 158 1867 7270

Skype FairyTan
WeChat (+86) 15818677270
WhatsApp (+86) 15818677270

Version	Information	Date
V1.0	First Version	11-29-2021

RoHS

PIN	SIGNAL
1	XSHUTDOWN
2	EXTCLK
3	RESET_BAR
4	SDATA
5	SCLK
6	AFVDD 2.8V
7	DOVDD 1.8V
8	DVDD 1.2V
9	AVDD 2.8V
10	AGND
11	CLK_P
12	CLK_N
13	DGND
14	DATA0_P
15	DATA0_N
16	DGND
17	DATA1_P
18	DATA1_N
19	DGND
20	DATA2_P
21	DATA2_N
22	DGND
23	DATA3_P
24	DATA3_N

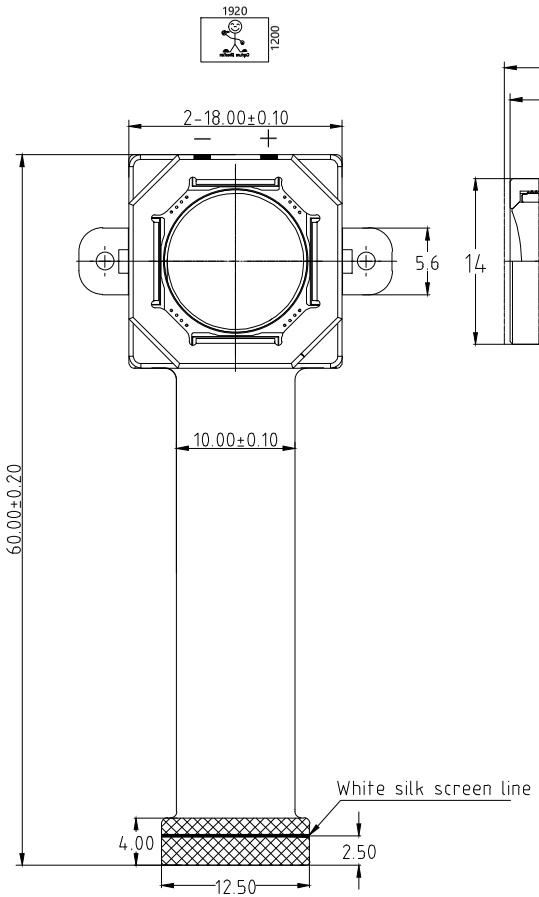

TOP VIEW

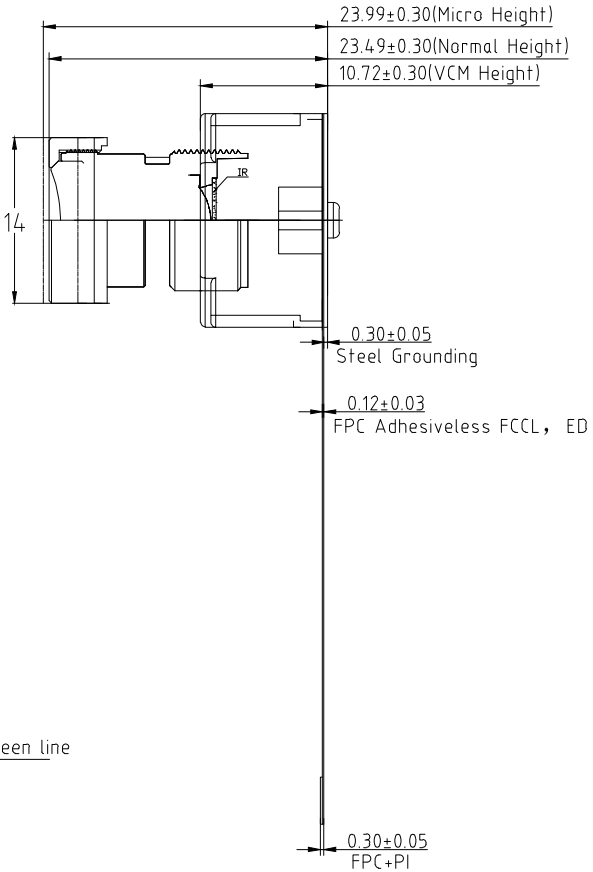

SIDE VIEW

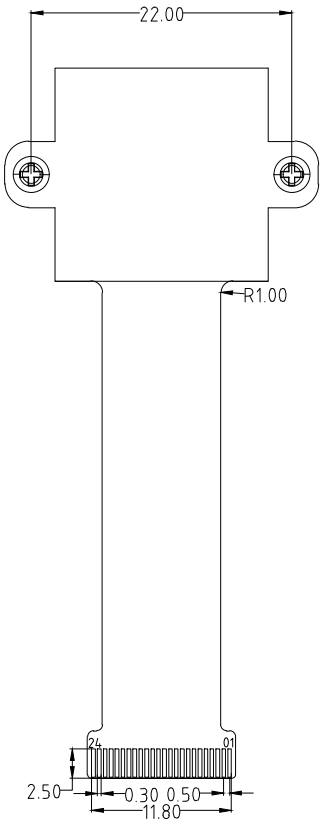

BOTTOM VIEW

NOTE:

1.The device slave address:0x20(write);0x21(r);

2.Driver IC:DW9714P

Parameter:

1、Sensor specification:

Image Sensor: AR0234CSSC00SUKA0-CP

Pixel: 3.0um×3.0um

Lens Type: 1/2.6

Important Voltage Description: DVDD1.2V (external power supply);

2、Lens specification:

FOV: 68°(D);57°(H);35°(V)

F/NO.: 2.1

TV distortion: <-5%

Focal length: 6.03mm

Composition: 2G2P+IR FILTER

IR Cut Coating: 940nm±10nm@50%

Designed By	Kevin	Model Name:	DMT-AR0234 V1.0 IR940S		
Checked By	Aouly_Yan	Projection Type: Third Angle	Unit: mm	Material: ----------	
			Scale: 1:1	Sheet: 1 of 1	Version: 1/0

HAMPO-LENS-TRC-20522A18-01

NOTE:

1.All surfaces are AR coated

2.IR Filter SPEC.

Tavg≥92%	440~630nm
Tmin≥88%	440~630nm
T=50%	650~670nm
T<3%	700~1000nm

3.Material applied tally with ROHS standard

4.IR Corrective (Day & Night) : YES

SPECIFICATION	
Sensor Type	AR0234(1/2.6)_1920*1200
Focal Length	6.03mm
Total Length	22.67mm
F/NO	2.1
Mechanical BFL	5.88
Optical FOV(D)	68°(Y=3.39)
Optical FOV(H)	57°(Y=2.88)
Optical FOV(V)	35°(Y=1.8)
TV Distortion	<-5%
Relative Illumination	>59%
Chief Ray Angle	<13°
Construction	2Glass+2Plastic+1 IR

REV	DISCRIPTION	NAME	DATE
1			
2			
3			
4			

	NAME	DATE
DRAWN		
CHECKED		
APPROVED		

PART NAME

VIEW

SCALE 5:1

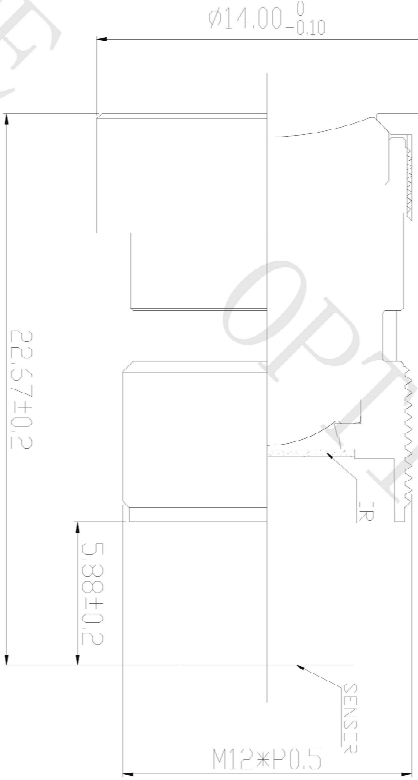

TRACE OPTICAL

Dongguan Hampo Electronic Technology Co., Ltd.
Address No. 58, New Arising Industrial Zone,
Tangxia Town, Dongguan, Guangdong, China

Web www.HampoTech.com
E-mail
Fairy@hampotech.com
Ella@hampotech.com

Tel (+86) 769 8798 9852
Fax (+86) 879 8798 9853
Mobile (+86) 158 1867 7270

Skype FairyTan
WeChat (+86) 15818677270
WhatsApp (+86) 15818677270

DW9714P

Upgraded Conventional AF Driver IC

FEATURES

120mA output driver with 10-bit resolution DAC
Smart Actuator Control (SAC™) modes
Supply voltage (V_{DD}): 2.3V to 4.3V
I/O voltage (V_{IN}): 1.8V to V_{DD}
Fast mode and Fast mode plus I^2C interface compatible
Power On Reset (POR)
Power Down (PD) mode current consumption less than 1uA
Package: 6-pin WLCSP (0.77mm x 1.14mm x 0.30mm)

APPLICATIONS

Mobile camera
Digital still camera
Camcorder
Web camera
Action camera

GENERAL DESCRIPTION

The DW9714P designed for linear control of Voice Coil Motors (VCM). This device is compatible with DW9714. The DW9714P has a single 10-bit DAC with 120mA output current sink capability. This device features SAC™ mode which can minimize the mechanical vibration and achieve very fast mechanical settling time. The SAC™ is protected by patent and registered trademark of DONGWOON ANATECH.

The DW9714P operates from a single 2.3V to 4.3V supply. The internal DAC is controlled via an I^2C serial interface that operates at clock rate up to 1MHz. The I^2C address for the DW9714P is 0x18. The DW9714P offers PD mode with current consumption less than 1uA.

The DW9714P can be used for auto focus applications in mobile cameras, digital still cameras, camcorders, web cameras and action cameras.

TYPICAL APPLICATION CIRCUIT

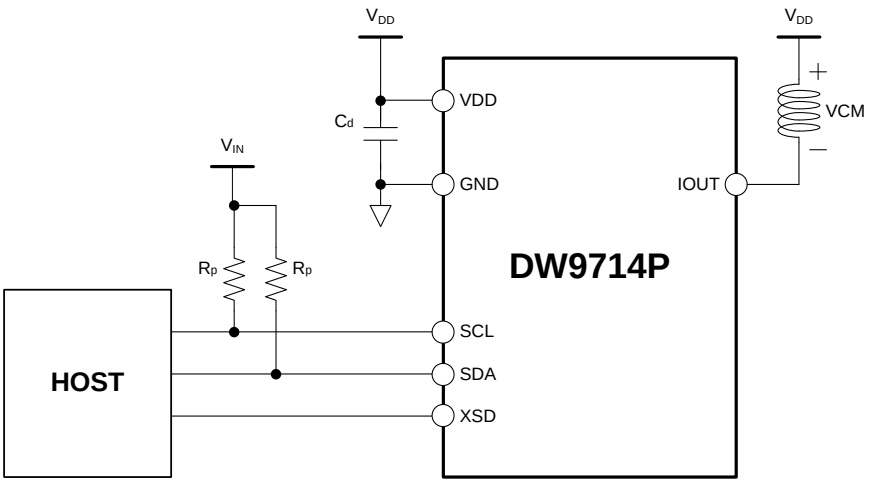

Figure 1. Typical application circuit

The product information in this catalog is for reference only. Please request the Engineering Drawing for the most current and accurate design information.
All non-RoHS products have been discontinued, or will be discontinued soon. Please check the products status on the Hirose website RoHS search at www.hirose-connectors.com, or contact your Hirose sales representative.

0.5mm and 1mm Pitch Connectors For FPC/FFC

FH12 Series

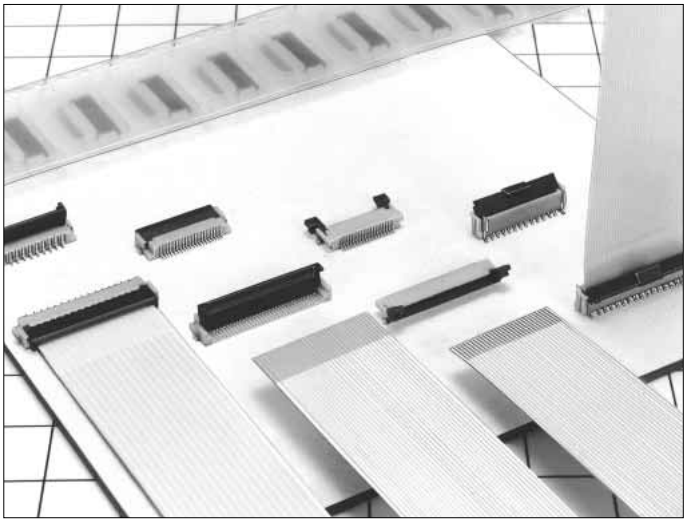

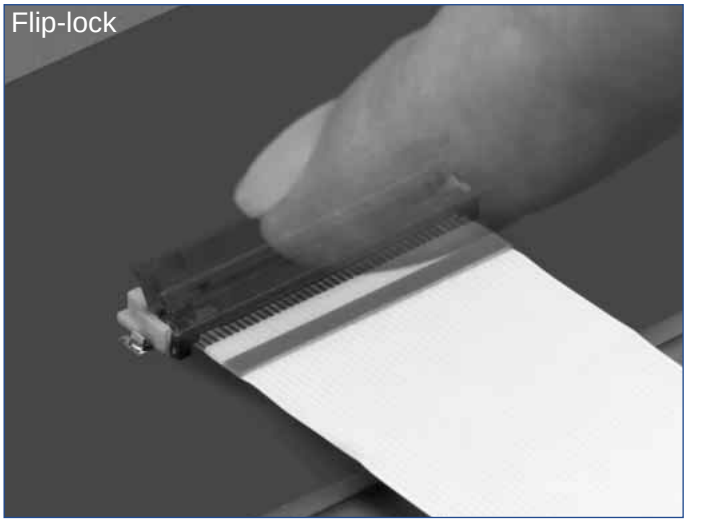

■Features

1. Ease of Use and Space Savings

Only one finger or 6.9N (Newtons) of force is required to lock Hirose's rotational actuator (flip-lock) as compared to using 2 fingers and 39.2N to close a FFC/FPC connector from our competition.

The Flip-Lock design also allows customers to place 2 or more connectors side by side as there is no need to waste additional board space for a side latch.

2. Strengthened Flip-lock Actuator

The standard Flip-Lock requires only 2.0mm height above the board. A strengthened lock lever is available which only requires an additional 0.4mm.

3. Supports Thin FPC (0.18mm)

Hirose does not require double-sided FPC to have any additional strengthening plate or stiffener and can therefore support a thickness of as little as 0.18mm +/- 0.05.

4. Hirose Ensures Reliability

Hirose's patented half tuning fork contacts maintain the required normal force without relying on the connector housing. With our competitor's conventional products the housing walls support the contact force, which does not provide for long-term reliability.

5. Prevention of Solder Bridge

Excess solder cavity absorbs excessive solder and avoids solder bridging.

6. Three different assembly types

FH12 is offered in Top & Bottom Contact and Vertical Mount and offered in both a 0.5mm contact pitch as well as a 1.0mm contact pitch (bottom contact only).

■Applications

Notebook computers, printers, PDAs, digital cameras and other compact devices for interconnecting the main circuit board with the LCD, HDD or other device.

Rotating One-touch Mechanism

①

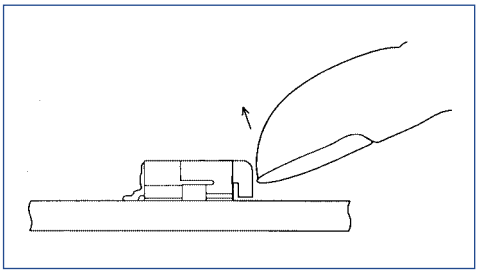

②

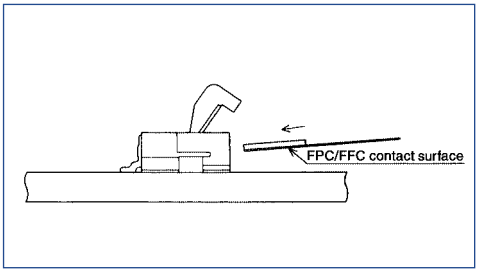

③

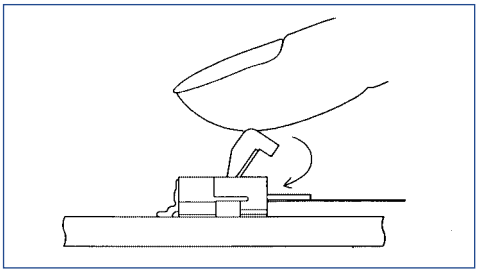

■Product Specifications

Rating	Current rating: 0.5A DC(Note 1) Voltage rating: 50V AC	Operating Temperature Range:−40 to +70℃ (Note 2) Operating Humidity Range:Relative humidity, 90% max. (Not dewed)	Storage Temperature Range:−10 to +50℃ (Note 3) Storage Humidity Range:Relative humidity, 90% max. (Not dewed)

Applicable FPC	t=0.3±0.05 Gold plated	t=0.18 ± 0.05 for FH12F-∗S-0.5SH

Item	Specification	Conditions
1. Insulation resistance	500M ohms minimum	100V DC
2. Withstanding voltage	No flashover or insulation breakdown.	150V AC/1 minute
3. Contact resistance	50m ohms maximum	1mA
4. Durability (Insertion/withdrawal)	Contact resistance: 50m ohms maximum No damage, cracks, or parts dislocation.	20 cycles
5. Vibration	No electrical discontinuity of 1μs or more Contact resistance: 50m ohms maximum. No damage, cracks, or parts dislocation.	Frequency: 10 to 55 Hz, single amplitude of 0.75 mm, 2 hours in each of the 3 directions.
6. Shock	No electrical discontinuity of 1μs or more Contact resistance: 50m ohms maximum. No damage, cracks, or parts dislocation.	Acceleration of 490 m/s², 11 ms duration, sine half-wave waveform, 3 cycles in each of the 3 axis.
7. Humidity(Steady state)	Contact resistance: 50m ohms maximum. Insulation resistance: 50M ohms minimum. No damage, cracks, or parts dislocation.	96 hours at 40℃ and humidity of 90% to 95%
8. Temperature Cycle	Contact resistance: 50m ohms maximum. Insulation resistance: 50M ohms minimum. No damage, cracks, or parts dislocation.	Temperature: -40℃ → 15 to 35℃ → 85℃ → 15 to 35℃, Time: 30 → 5 max. → 30 → 5 max.(minutes) 5 cycles
9.Resistance to Soldering heat	No deformation of components affecting performance.	Reflow: At the recommended temperature profile Manual soldering: 350±5℃ for 3 seconds

Note 1: When passing the current through all of the contacts,use 70% of the current rating.
Note 2: Includes temperature rise caused by current flow.
Note 3: The term "storage" refers to products stored for long period of time prior to mounting and use. Operating Temperature Range and Humidity range covers nonconducting condition of installed connectors in storage, shipment or during transportation.

■Material

Part	Material	Finish	Remarks
Insulator	Polyamide, LCP(60 pos.)	Color : Beige	UL94V-0
Actuator	PPS	Color : Dark brown	
Contact	Phosphor bronze	Gold plated	———
Metal Fittings	Brass	Tin plated	

■Ordering Information

FH12 A - 10 (4) - S A - 0.5 SH (55)

❶ ❷ ❸ ❹ ❺ ❻ ❼ ❽ ❾

❶ Series Name : FH12	❺ Contact alignment: Single
❷ Blank : standard type A : Top contact type S : Type with strengthed flip-lock actuator F : Type with 0.18mm FPC End Thickness	❻ Eccentric direction: Blank : standard type A : Eccentric type ❼ Contacts Pitch : 0.5mm, 1mm
❸ Standard type : Number of contacts Eccentric type : Number of contacts in 0.5mm housing	❽ Contact type SH : SMT horizontal mounting type SV : SMT vertical mounting type
❹ Standard type : Blank Eccentric type : Number of contacts	❾ Plating specification (55) : Gold plated

The product information in this catalog is for reference only. Please request the Engineering Drawing for the most current and accurate design information.
All non-RoHS products have been discontinued, or will be discontinued soon. Please check the products status on the Hirose website RoHS search at www.hirose-connectors.com, or contact your Hirose sales representative.

◆Series Configuration

Pitch	Bottom Contact Type	Top Contact Type	Vertical mounting Type
0.5mm	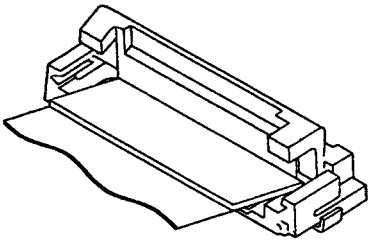 **FH12- ** S-0.5SH** P.12 Number of contacts 6, 8, 10, 11, 12, 13, 14, 15, 16, 17, 18, 19, 20, 22, 24, 25, 26, 28, 30, 32, 33, 34, 35, 36, 40, 45, 50, 53	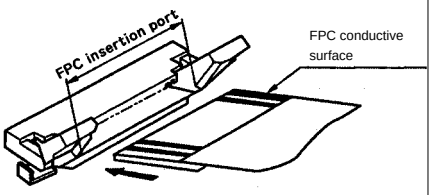 **FH12A- ** S-0.5SH** P.15 Number of contacts 10, 12 ,15, 16, 18, 20, 22, 24, 26, 28, 29, 30, 32, 33, 34, 36, 40, 42, 45, 50	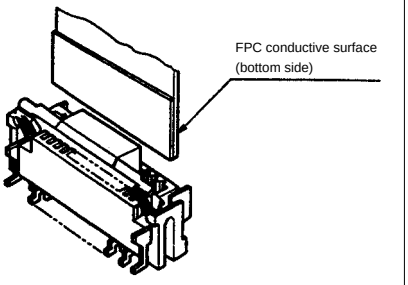 **FH12- ** S-0.5SV** P.16 Number of contacts 10, 12, 13, 15, 16, 17, 18, 20, 22, 24, 26, 30, 32, 33, 34, 36, 40, 45, 49, 50, 60
	Type with Strengthened Lock Lever **FH12S- ** S-0.5SH** P.13 Number of contacts 30, 40, 45, 50, 53		
	Type with 0.18mm FPC End Thickness **FH12F- ** S-0.5SH** P.14 Number of contacts 6, 8, 10, 12, 13, 14, 15, 16, 18, 20, 22, 24, 25, 26, 28, 30, 32, 34, 36, 40		
1mm	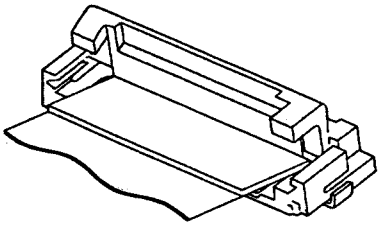 Standard **FH12- ** S-1SH** P.18 Eccentric **FH12- ** (**) SA-1SH** Standard Number of contacts 5, 6, 7, 8, 9, 11, 12,16,17,22,26 Eccentric Number of contacts 4, 6, 8, 10, 11, 14, 19, 24		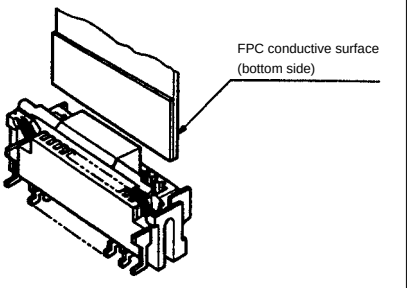 **FH12- ** S-1SV** P.19 Number of contacts 6, 7, 8, 16, 20, 22, 24

■0.5mm Pitch Bottom Contact Type

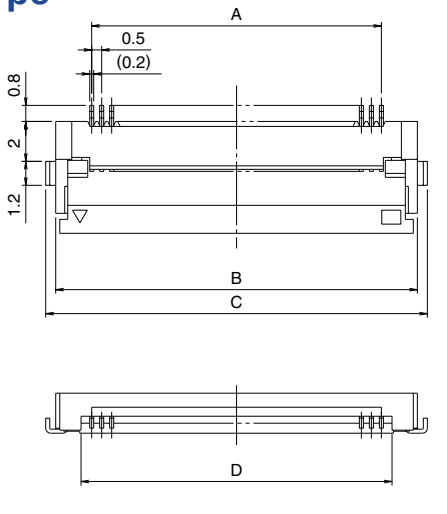

Mated Cross-sectional Diagram

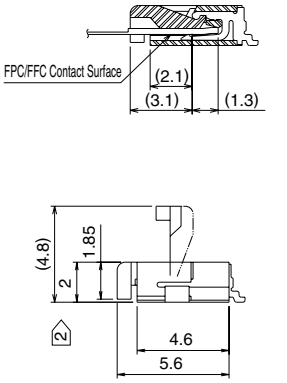

Unit:mm

	Part Number	CL No.	Number of Contacts	A	B	C	D	RoHS
	FH12- 6S-0.5SH(55)	586-0582-5-55	6	2.5	6.1	7.1	3.57	YES
	FH12- 8S-0.5SH(55)	586-0744-5-55	8	3.5	7.1	8.1	4.57	
	FH12-10S-0.5SH(55)	586-0522-3-55	10	4.5	8.1	9.1	5.57	
	FH12-11S-0.5SH(55)	586-0600-5-55	11	5	8.6	9.6	6.07	
	FH12-12S-0.5SH(55)	586-0704-0-55	12	5.5	9.1	10.1	6.57	
	FH12-13S-0.5SH(55)	586-0549-0-55	13	6	9.6	10.6	7.07	
	FH12-14S-0.5SH(55)	586-0533-0-55	14	6.5	10.1	11.1	7.57	
	FH12-15S-0.5SH(55)	586-0523-6-55	15	7	10.6	11.6	8.07	
	FH12-16S-0.5SH(55)	586-0531-4-55	16	7.5	11.1	12.1	8.57	
	FH12-17S-0.5SH(55)	586-0606-1-55	17	8	11.6	12.6	9.07	
	FH12-18S-0.5SH(55)	586-0530-1-55	18	8.5	12.1	13.1	9.57	
	FH12-19S-0.5SH(55)	586-0534-2-55	19	9	12.6	13.6	10.07	
	FH12-20S-0.5SH(55)	586-0524-9-55	20	9.5	13.1	14.1	10.57	
	FH12-22S-0.5SH(55)	586-0532-7-55	22	10.5	14.1	15.1	11.57	
	FH12-24S-0.5SH(55)	586-0521-0-55	24	11.5	15.1	16.1	12.57	
	FH12-25S-0.5SH(55)	586-0692-3-55	25	12	15.6	16.6	13.07	
	FH12-26S-0.5SH(55)	586-0576-2-55	26	12.5	16.1	17.1	13.57	
	FH12-28S-0.5SH(55)	586-0612-4-55	28	13.5	17.1	18.1	14.57	
Note 2	FH12-30S-0.5SH(55)	586-0525-1-55	30	14.5	18.1	19.1	15.57	
	FH12-32S-0.5SH(55)	586-0681-7-55	32	15.5	19.1	20.1	16.57	
	FH12-33S-0.5SH(55)	586-0520-8-55	33	16	19.6	20.6	17.07	
	FH12-34S-0.5SH(55)	586-0617-8-55	34	16.5	20.1	21.1	17.57	
	FH12-35S-0.5SH(55)	586-0740-4-55	35	17.0	20.6	21.6	18.07	
	FH12-36S-0.5SH(55)	586-0526-4-55	36	17.5	21.1	22.1	18.57	
Note 2	FH12-40S-0.5SH(55)	586-0527-7-55	40	19.5	23.1	24.1	20.57	
Note 2	FH12-45S-0.5SH(55)	586-0528-0-55	45	22	25.6	26.6	23.07	
Note 2	FH12-50S-0.5SH(55)	586-0529-2-55	50	24.5	28.1	29.1	25.57	
Note 2	FH12-53S-0.5SH(55)	586-0595-7-55	53	26	29.6	30.6	27.07	

Note 1 : Embossed tape reel packaging (2,000 pieces/reel).
Order by number of reels.

Note 2 : If there is no problem with the connector height, we recommend the type with the strengthened Flip-lock actuator (FH12S-∗S-0.5SH).
Standard type connector height: 2 mm
Connector height of type with strengthened Flip-lock actuator: 2.4 mm

AR0234CS

1/2.6-inch 2.3 Mp CMOS Digital Image Sensor with Global Shutter

Product Overview

For complete documentation, see the data sheet.

The AR0234CS is a 1/2.6-inch 2Mp CMOS digital image sensor with an active-pixel array of 1920 (H) x 1200 (V). It incorporates a new innovative global shutter pixel design optimized for accurate and fast capture of moving scenes at 120 frame per second, full resolution. The sensor produces clear, low noise images in both low-light and bright scenes. It includes sophisticated camera functions such as auto exposure control, windowing, row skip mode, column-skip mode, pixel-binning, and both video and single frame modes. It is programmable through a simple two-wire serial interface. The AR0234CS produces extraordinarily clear, sharp digital pictures with an industry leading Global Shutter Efficiency, and its ability to capture both continuous video and single frames makes it the perfect choice for a wide range of applications, including scanning, autonomous mobility, surveillance and industrial quality control.

Features

- Best in Class Global Shutter Efficiency
- Low Dark Current/Hot Pixels
- High Linear Full Well
- Low Operational Power
- Small Form Factor
- Built-In Statistics Engine
- Multiple Functional Modes - Row & Col Skip Modes, Pixel Binning

Benefits

- Superior Image Quality for fast-moving objects
- Reduced Total Noise Floor, Higher SNR delivering High Image Fidelity
- High Dynamic Range, delivers higher image clarity
- Suitable of Battery Powered Applications
- Ideal for Space Constrained Applications
- Offloads Image Processor Loads, provides scene details with Prog. ROI
- Application-specific Image Quality Selections with Performance/Power Trade-offs

Applications

- Gesture recognition
- 3D scanning
- Position tracking
- Machine vision
- AR/VR/MR/XR

End Products

- Autonomous Mobile Robots
- Autonomous Guide Vehicles (Drones)
- Video Doorbells
- AR/VR/MR Headsets
- Barcode Readers

Part Electrical Specifications

Product	Pricing ($/Unit)	Compliance	Status	Type	Megapixels	Frame Rate (fps)	Optical Format	Shutter Type	Pixel Size (µm)	Output Interface	Color	Package Type
AR0234CSSC00SUD20		Pb H	NEW	CMOS	2.3	120	1/2.6 inch	Global Shutter	3.0 x 3.0		Color	
AR0234CSSC00SUKA0-CP		Pb H	Active	CMOS	2.3	120	1/2.6 inch	Global Shutter	3.0 x 3.0		Color	ODCSP-83
AR0234CSSC00SUKA0-CP1		Pb H	Active	CMOS	2.3	120	1/2.6 inch	Global Shutter	3.0 x 3.0		Color	ODCSP-83
AR0234CSSC00SUKA0-CR		Pb H	Active	CMOS	2.3	120	1/2.6 inch	Global Shutter	3.0 x 3.0		Color	ODCSP-83
AR0234CSSC28SUD20		Pb H	NEW	CMOS	2.3	120	1/2.6 inch	Global Shutter	3.0 x 3.0		Color	
AR0234CSSC28SUKA0-CP		Pb H	Active	CMOS	2.3	120	1/2.6 inch	Global Shutter	3.0 x 3.0		Color	ODCSP-83
AR0234CSSC28SUKA0-CP1		Pb H	Active	CMOS	2.3	120	1/2.6 inch	Global Shutter	3.0 x 3.0		Color	ODCSP-83
AR0234CSSC28SUKA0-CR		Pb H	Active	CMOS	2.3	120	1/2.6 inch	Global Shutter	3.0 x 3.0		Color	ODCSP-83
AR0234CSSM00SUD20		Pb H	NEW	CMOS	2.3	120	1/2.6 inch	Global Shutter	3.0 x 3.0		Mono	
AR0234CSSM00SUKA0-CP		Pb H	Active	CMOS	2.3	120	1/2.6 inch	Global Shutter	3.0 x 3.0		Mono	ODCSP-83
AR0234CSSM00SUKA0-CP1		Pb H	Active	CMOS	2.3	120	1/2.6 inch	Global Shutter	3.0 x 3.0		Mono	ODCSP-83
AR0234CSSM00SUKA0-CR		Pb H	Active	CMOS	2.3	120	1/2.6 inch	Global Shutter	3.0 x 3.0		Mono	ODCSP-83
AR0234CSSM28SUD20		Pb H	NEW	CMOS	2.3	120	1/2.6 inch	Global Shutter	3.0 x 3.0		Mono	
AR0234CSSM28SUKA0-CP		Pb H	Active	CMOS	2.3	120	1/2.6 inch	Global Shutter	3.0 x 3.0		Mono	ODCSP-83
AR0234CSSM28SUKA0-CP1		Pb H	Active	CMOS	2.3	120	1/2.6 inch	Global Shutter	3.0 x 3.0		Mono	ODCSP-83
AR0234CSSM28SUKA0-CR		Pb H	Active	CMOS	2.3	120	1/2.6 inch	Global Shutter	3.0 x 3.0		Mono	ODCSP-83

Cameras Applications

Dongguan Hampo Electronic Technology Co., Ltd.
Address No. 58, New Arising Industrial Zone, Tangxia Town, Dongguan, Guangdong, China

Web www.HampoTech.com
E-mail
Fairy@hampotech.com
Ella@hampotech.com

Tel (+86) 769 8798 9852
Fax (+86) 879 8798 9853
Mobile (+86) 158 1867 7270

Skype FairyTan
WeChat (+86) 15818677270
WhatsApp (+86) 15818677270

Camera Reliability Test

Reliability Inspection Item			Testing Method	Acceptance Criteria
Category		Item		
Environmental	Storage Temperature	High 60°C 96 Hours	Temperature Chamber	No Abnormal Situation
		Low -20°C 96 Hours	Temperature Chamber	No Abnormal Situation
	Operation Temperature	High 60°C 24 Hours	Temperature Chamber	No Abnormal Situation
		Low -20°C 24 Hours	Temperature Chamber	No Abnormal Situation
	Humidity	60°C 80% 24 Hours	Temperature Chamber	No Abnormal Situation
	Thermal Shock	High 60°C 0.5 Hours Low -20°C 0.5 Hours Cycling in 24 Hours	Temperature Chamber	No Abnormal Situation
Physical	Drop Test (Free Falling)	Without Package 60cm	10 Times on Wood Floor	Electrically Functional
		With Package 60cm	10 Times on Wood Floor	Electrically Functional
	Vibration Test	50Hz X-Axis 2mm 30min	Vibration Table	Electrically Functional
		50Hz Y-Axis 2mm 30min	Vibration Table	Electrically Functional
		50Hz Z-Axis 2mm 30min	Vibration Table	Electrically Functional
	Cable Tensile Strength Test	Loading Weight 4 kg 60 Seconds Cycling in 24 Hours	Tensile Testing Machine	Electrically Functional
Electrical	ESD Test	Contact Discharge 2 KV	ESD Testing Machine	Electrically Functional
		Air Discharge 4 KV	ESD Testing Machine	Electrically Functional
	Aging Test	On/Off 30 Seconds Cycling in 24 Hours	Power Switch	Electrically Functional
	USB Connector	On/Off 250 Times	Plug and Unplug	Electrically Functional

Dongguan Hampo Electronic Technology Co., Ltd.
Address No. 58, New Arising Industrial Zone,
Tangxia Town, Dongguan, Guangdong, China

Web www.HampoTech.com
E-mail
Fairy@hampotech.com
Ella@hampotech.com

Tel (+86) 769 8798 9852
Fax (+86) 879 8798 9853
Mobile (+86) 158 1867 7270

Skype FairyTan
WeChat (+86) 15818677270
WhatsApp (+86) 15818677270

Camera Inspection Standard

Inspection Item			Inspection Method	Standard of Inspection
Category		Item		
Appearance	FPC/ PCB	Color	The Naked Eye	Major Difference is Not Allowed.
		Be Torn/Chopped	The Naked Eye	Copper Crack Exposure is Not Allowed.
		Marking	The Naked Eye	Clear, Recognizable (Within 30cm Distance)
	Holder	Scratches	The Naked Eye	The Inside Crack Exposure is Not Allowed
		Gap	The Naked Eye	Meet the Height Standard
		Screw	The Naked Eye	Make Sure Screws Are Presented (If Any)
		Damage	The Naked Eye	The Inside Crack Exposure is Not Allowed
	Lens	Scratch	The Naked Eye	No Effect On Resolution Standard
		Contamination	The Naked Eye	No Effect On Resolution Standard
		Oil Film	The Naked Eye	No Effect On Resolution Standard
		Cover Tape	The Naked Eye	No Issue On Apprearance.
Function	Image	No Communication	Test Board	Not Allowed
		Bright Pixel	Black Board	Not Allowed In the Image Center
		Dark Pixel	White board	Not Allowed In the Image Center
		Blurry	The Naked Eye	Not Allowed
		No Image	The Naked Eye	Not Allowed
		Vertical Line	The Naked Eye	Not Allowed
		Horizontal Line	The Naked Eye	Not Allowed
		Light Leakage	The Naked Eye	Not Allowed
		Blinking Image	The Naked Eye	Not Allowed
		Bruise	Inspection Jig	Not Allowed
		Resolution	Chart	Follows Outgoing Inspection Chart Standard
		Color	The Naked Eye	No Issue
		Noise	The Naked Eye	Not Allowed
		Corner Dark	The Naked Eye	Less Than 100px By 100px
		Color Resolution	The Naked Eye	No Issue
Dimension		Height	The Naked Eye	Follows Approval Data Sheet
		Width	The Naked Eye	Follows Approval Data Sheet
		Length	The Naked Eye	Follows Approval Data Sheet
		Overall	The Naked Eye	Follows Approval Data Sheet

Dongguan Hampo Electronic Technology Co., Ltd.
Address No. 58, New Arising Industrial Zone,
Tangxia Town, Dongguan, Guangdong, China

Web www.HampoTech.com
E-mail
Fairy@hampotech.com
Ella@hampotech.com

Tel (+86) 769 8798 9852
Fax (+86) 879 8798 9853
Mobile (+86) 158 1867 7270

Skype FairyTan
WeChat (+86) 15818677270
WhatsApp (+86) 15818677270

HAMPO Package Solutions

Hampo Camera Module

Complete with Lens Protection Film

Tray with Grid and Space

Place Cameras on the Tray

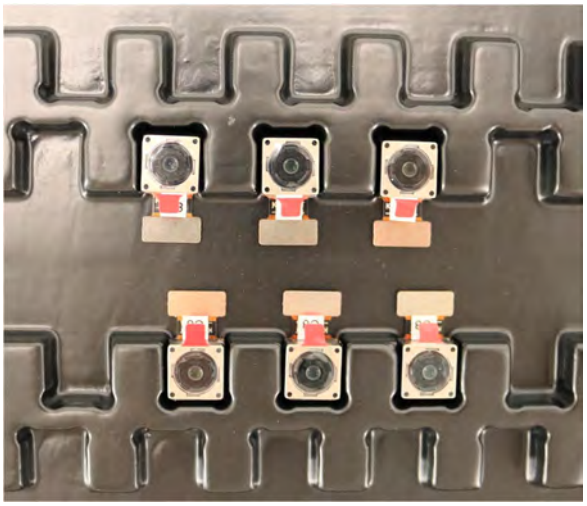

Dongguan Hampo Electronic Technology Co., Ltd.
Address No. 58, New Arising Industrial Zone,
Tangxia Town, Dongguan, Guangdong, China

Web www.HampoTech.com
E-mail
Fairy@hampotech.com
Ella@hampotech.com

Tel (+86) 769 8798 9852
Fax (+86) 879 8798 9853
Mobile (+86) 158 1867 7270

Skype FairyTan
WeChat (+86) 15818677270
WhatsApp (+86) 15818677270

Camera Modules Package Solution

Full Tray of Cameras

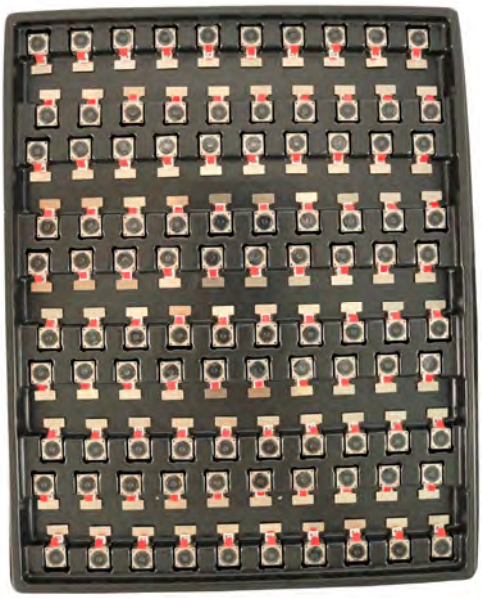

Cover Tray with Lid

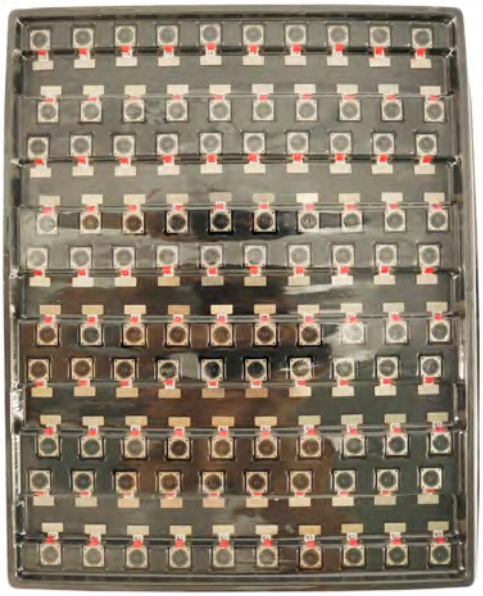

Place Tray into Anti-Static Bag

Vacuum the Anti-Static Bag

Dongguan Hampo Electronic Technology Co., Ltd.
Address No. 58, New Arising Industrial Zone,
Tangxia Town, Dongguan, Guangdong, China

Web www.HampoTech.com
E-mail
Fairy@hampotech.com
Ella@hampotech.com

Tel (+86) 769 8798 9852
Fax (+86) 879 8798 9853
Mobile (+86) 158 1867 7270

Skype FairyTan
WeChat (+86) 15818677270
WhatsApp (+86) 15818677270

Camera Modules Package Solution

Sealed Vacuum Anti-Static Bag with Labels

1. Model and Description 2. Quantity 3. Manufacturing Date Code 4. Caution

Dongguan Hampo Electronic Technology Co., Ltd.
Address No. 58, New Arising Industrial Zone, Tangxia Town, Dongguan, Guangdong, China

Web www.HampoTech.com
E-mail
Fairy@hampotech.com
Ella@hampotech.com

Tel (+86) 769 8798 9852
Fax (+86) 879 8798 9853
Mobile (+86) 158 1867 7270

Skype FairyTan
WeChat (+86) 15818677270
WhatsApp (+86) 15818677270

Large Order Package Solution

Place Foam Sheets Between Tray Bags

Foam Sheets are Larger Than Trays

Place Foam Sheets and Trays into Box

Foam Sheets are Tightly Fitting in Box

Seal the Carbon Box

Label the Carbon Shipping Box

Dongguan Hampo Electronic Technology Co., Ltd.
Address No. 58, New Arising Industrial Zone, Tangxia Town, Dongguan, Guangdong, China

Web www.HampoTech.com
E-mail
Fairy@hampotech.com
Ella@hampotech.com

Tel (+86) 769 8798 9852
Fax (+86) 879 8798 9853
Mobile (+86) 158 1867 7270

Skype FairyTan
WeChat (+86) 15818677270
WhatsApp (+86) 15818677270

Small Order Package Solution

Place Foam Sheets and Trays into Box

Foam Sheets are Nicely Fitting in Box

Cameras Packaged in Small Box

Labels on Small Box

Place Small Boxes into Carbon Box

Label the Carbon Shipping Box

Dongguan Hampo Electronic Technology Co., Ltd.
Address No. 58, New Arising Industrial Zone, Tangxia Town, Dongguan, Guangdong, China

Web www.HampoTech.com
E-mail
Fairy@hampotech.com
Ella@hampotech.com

Tel (+86) 769 8798 9852
Fax (+86) 879 8798 9853
Mobile (+86) 158 1867 7270

Skype FairyTan
WeChat (+86) 15818677270
WhatsApp (+86) 15818677270

Sample Order and Connector Package Solution

Place Camera Sample into Anti-Static Bag

Place Connectors into Anti-Static Bag

Label the Sample Bags

Place Connectors into Reel

Place Samples into the Carbon Box

Place Connectors into the Carbon Box

Dongguan Hampo Electronic Technology Co., Ltd.
Address No. 58, New Arising Industrial Zone, Tangxia Town, Dongguan, Guangdong, China

Web www.HampoTech.com
E-mail
Fairy@hampotech.com
Ella@hampotech.com

Tel (+86) 769 8798 9852
Fax (+86) 879 8798 9853
Mobile (+86) 158 1867 7270

Skype FairyTan
WeChat (+86) 15818677270
WhatsApp (+86) 15818677270

Company HAMPO

Dongguan Hampo Electronic Technology Co., Ltd. was established in 2015, a next-generation technology driven manufacturer specialized in research, design, and produce of audio and video products. Hampo is occupying 150,000 square feet automated plants with 500 employees of annual throughput 180,000,000 units cameras.

Hampo provides OEM, ODM design, contract manufacturing, and builds the camera products. You may provide the requirements to us, even with a hand draft, our sales and engineering work together to meet your needs. We consider ourselves your last-term partner in developing practical and innovative solutions.

Our team covers everything from initial concept development to mass produced product. Hampo specializes in customized camera design, raw material, electronic engineering, firmware/software development, product testing, and packing design. Our experienced strategic supply systems offer a robust and dependable manufacturing capacity for orders of various sizes.

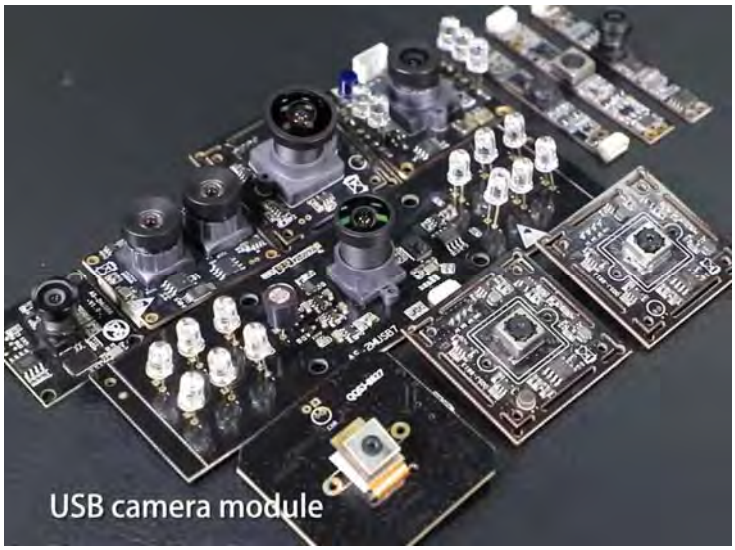

Limited Warranty

Hampo provides the following limited warranty if you purchased the Product(s) directly from Hampo company or from Hampo's website, www.hampotech.com. Product(s) purchased from other sellers or sources are not covered by this Limited Warranty. Hampo guarantees that the Product(s) will be free from defects in materials and workmanship under normal use for a period of one (1) year from the date you receive the product ("Warranty Period").

For all Product(s) that contain or develop material defects in materials or workmanship during the Warranty Period, Hampo will, at its sole option, either: (i) repair the Product(s); (ii) replace the Product(s) with a new or refurbished Product(s) (replacement Product(s) being of identical model or functional equivalent); or (iii) provide you a refund of the price you paid for the Product(s).

This Limited Warranty of Hampo is solely limited to repair and/or replacement on the terms set forth above. Hampo is not reliable or responsible for any subsequential events.

Dongguan Hampo Electronic Technology Co., Ltd.
Address No. 58, New Arising Industrial Zone,
Tangxia Town, Dongguan, Guangdong, China

Web www.HampoTech.com
E-mail
Fairy@hampotech.com
Ella@hampotech.com

Tel (+86) 769 8798 9852
Fax (+86) 879 8798 9853
Mobile (+86) 158 1867 7270

Skype FairyTan
WeChat (+86) 15818677270
WhatsApp (+86) 15818677270

Hampo Strength

Powerful Factory

Professional Service

Promised Delivery

翰普科技
HANPUKEJI

Dongguan Hampo Electronic Technology Co., Ltd.
Address No. 58, New Arising Industrial Zone,
Tangxia Town, Dongguan, Guangdong, China

Web www.HampoTech.com
E-mail
Fairy@hampotech.com
Ella@hampotech.com

Tel (+86) 769 8798 9852
Fax (+86) 879 8798 9853
Mobile (+86) 158 1867 7270

Skype FairyTan
WeChat (+86) 15818677270
WhatsApp (+86) 15818677270